PN：CL-P142-AL12SW-A (Black)
CL-P143-AL12SW-A (White)

UX400 Black / White

ARGB Sync CPU Cooler

*Requires motherboard Sync for ARGB lighting effect

UX400 Black / White

ARGB Sync CPU Cooler

Features :

- 4 x Ø6 mm high performance U-shape copper heatpipes
- Supports up to 240W
- Features a special design that prevents the cooler from interfering with the RAM area
- Supports Motherboard sync software
- Universal Intel/ AMD socket compatibility
- Long life hydraulic bearing for reliable and silent operation

Dimension :

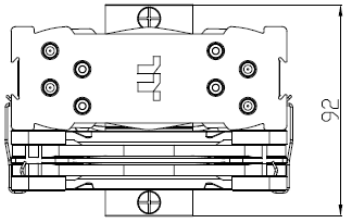

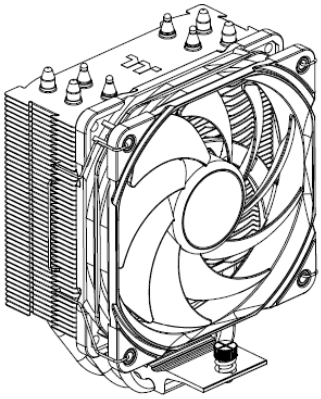

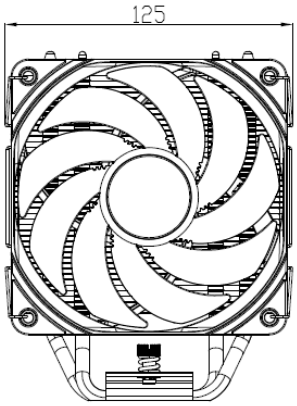

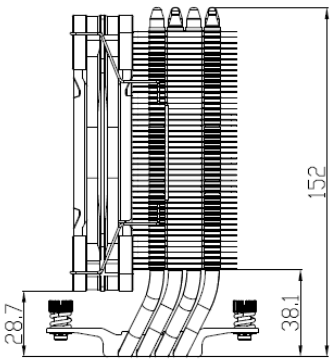

UX400 Black / White

ARGB Sync CPU Cooler

Spec :

Unit :mm

P/N	CL-P142-AL12SW-A (Black) CL-P143-AL12SW-A (White)
Compatibility (CPU Socket)	Intel LGA 1851/1700/1200/1156/1155/1151/1150 AMD AM5/AM4/FM2/FM1/AM3+/AM3/AM2+/AM2
Heatsink Dimension	125 x 92 x 152 mm (L x W x H)
Heatsink Material	Aluminum Fins Copper Heatpipes
Heatpipe	Φ6mm x 4 pcs
Fan Dimension	120 x 120 x 25 mm (L x W x H)
Fan Quantity	1pcs
Fan Speed	PWM 700~1800 RPM
Fan Rated Voltage	12V & 5V
Fan Start Voltage	6.0 V
Fan Rated Current	0.4A & 0.288A
Fan Power Input	3.0W & 1.44W
Air Flow	62.72 CFM
Static Pressure	1.47 mm-H2O
Noise Level	25.0 dBA
Life Time	30,000 hours
Fan Connector	5V ARGB Header 2510 - 4Pin
Cooling Power	240 W

***Requires motherboard Sync for ARGB lighting effect**

Angle View : UX400 ARGB Black

Front View

Side View

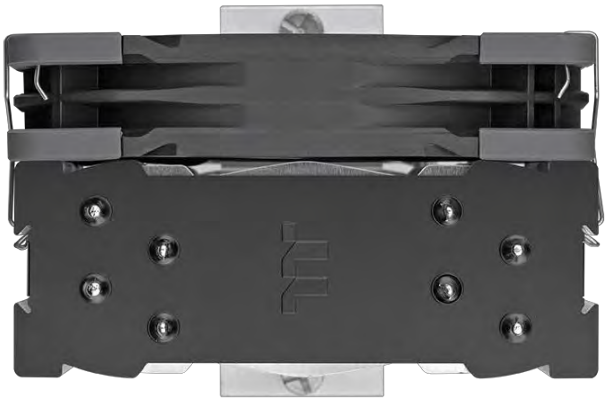

Top View

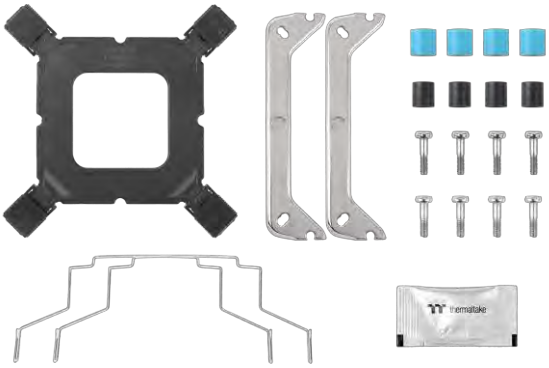

Part List

thermaltake

Angle View：

UX400 ARGB White

Front View

Side View

Top View

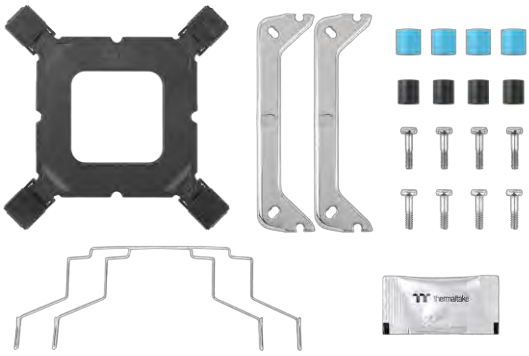

Part List

thermaltake

Features :

UX400 ARGB Series

Heat-pipes Direct Touch Technology

4 Heat pipe to TDP 240W

120 mm fan

High Airflow
ARGB Sync Fan

Application

Non-interference cooling never interfere the RAM area

Features :

UX400 ARGB Series

Application view

•5V Sync

Support ASUS、MSI、GIGABYTE and ASROCK 5V RGB motherboard Sync.

*Caution: the motherboard signal connector only supports 5V header.

Aura Addressable Header

Digital Pin Header

JRAINBOW Header

Addressable RGB LED Header

PN：CL-P142-AL12SW-A (Black)
CL-P143-AL12SW-A (White)

UX400 Black / White

ARGB Sync CPU Cooler

*Requires motherboard Sync for ARGB lighting effect