P/N: CL-W465-PL12SW-A、CL-W466-PL12SW-A
CL-W467-PL12SW-A、CL-W468-PL12SW-A

TH240 & 360 V3

ARGB Sync

Release the full CPU Horsepower

thermaltake

*Requires motherboard sync for ARGB lighting effect

•Specification

TH240 V3 ARGB Sync

Product	P/N	CL-W465-PL12SW-A (Black) CL-W467-PL12SW-A (Snow edition)
Compatibility	CPU Socket	Intel LGA 2066/2011-3/2011/1954/1851/1700/1366/1200/1156/1155/1151/1150 AMD AM5/AM4
Water Block	Material	Copper
Pump	Motor Speed	PWM 800~2500 RPM
	Rated Voltage	12V/5V
	Rated Current	0.35A/0.72A
	Power Input	4.2W/3.6W
	Connector	2510 – 4 Pin / ARGB – 3Pin
Fan	Dimension	240 x 120 x 25 mm
	Fan Speed	PWM 500~2500 R.P.M
	Rated Voltage	12 V/ 5 V
	Rated Current	0.6 A & 0.6 A
	Power Input	7.2 W & 3 W
	Air Flow	85.29 CFM (per fan)
	Static Pressure	3.86 mm-H2O (per fan)
	Noise Level	37.8 dB-A (per fan)
	Connector	2510 – 4 Pin / ARGB – 3Pin
Radiator	Dimension	277 x 120 x 27 mm
	Material	Aluminum
Tube	Length	460mm
	Material	Rubber
TDP		355W

*Requires motherboard sync for ARGB lighting effect

•Specification

TH360 V3 ARGB Sync

Product	P/N	CL-W466-PL12SW-A (Black) CL-W468-PL12SW-A (Snow edition)
Compatibility	CPU Socket	Intel LGA 2066/2011-3/2011/1954/1851/1700/1366/1200/1156/1155/1151/1150 AMD AM5/AM4
Water Block	Material	Copper
Pump	Motor Speed	PWM 800~2500 RPM
	Rated Voltage	12V/5V
	Rated Current	0.35A/0.72A
	Power Input	4.2W/3.6W
	Connector	2510 – 4 Pin / ARGB – 3Pin
Fan	Dimension	360 x 120 x 25 mm
	Fan Speed	PWM 500~2500 R.P.M
	Rated Voltage	12 V/ 5 V
	Rated Current	0.9 A & 0.9 A
	Power Input	10.8 W & 4.5W
	Air Flow	85.29 CFM (per fan)
	Static Pressure	3.86 mm-H2O (per fan)
	Noise Level	37.8 dB-A (per fan)
	Connector	2510 – 4 Pin / ARGB – 3Pin
Radiator	Dimension	397 x 120 x 27 mm
	Material	Aluminum
Tube	Length	460mm
	Material	Rubber
TDP		365W

*Requires motherboard sync for ARGB lighting effect

• Detailed Features

- Rotatable pump head with Infinity Mirror Design
- Integrated Single-Frame Fan with vibrant ARGB lighting
- Advanced pump design for superior cooling efficiency and system reliability
- Supports motherboard sync software control

•5V ARGB Sync

Support ASUS、MSI、GIGABYTE and ASROCK 5V ARGB motherboard sync.

*Caution:
The motherboard signal connection only supports 5V ARGB header.

Aura Addressable Header

Digital Pin Header

JRAINBOW Header

Addressable RGB LED Header

• Appearance

TH240 V3 ARGB Sync

Pump Top View

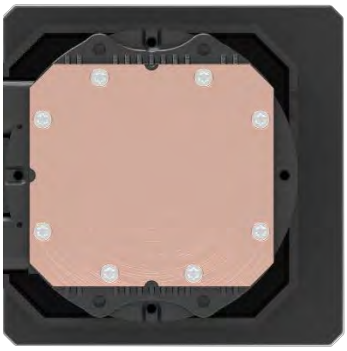

Pump Botton View

Pump Side View

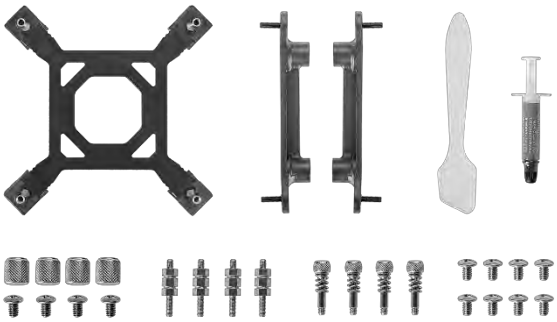

Parts

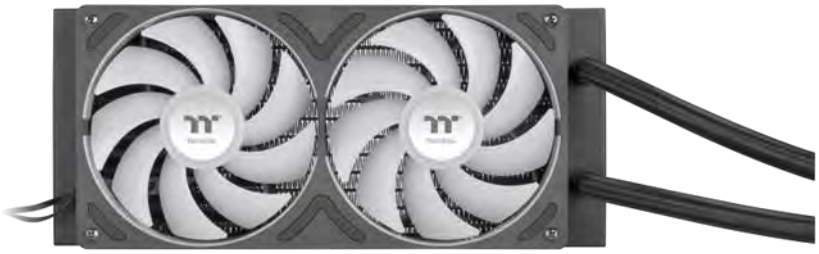

Fan & Radiator Top View

Fan & Radiator Back View

Fan & Radiator Side View

• Appearance

TH240 V3 ARGB Sync Snow Edition

Pump Top View

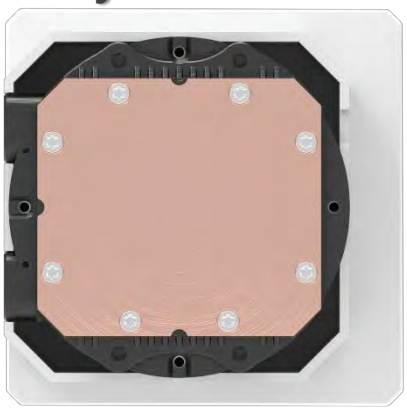

Pump Botton View

Pump Side View

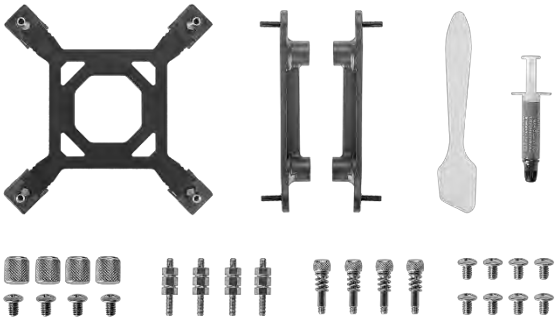

Parts

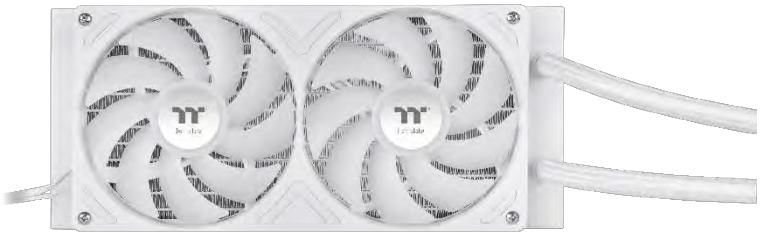

Fan & Radiator Top View

Fan & Radiator Back View

Fan & Radiator Side View

• Appearance

TH360 V3 ARGB Sync

Pump Top View

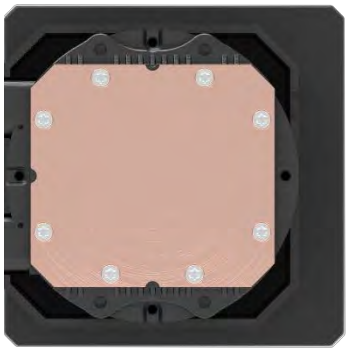

Pump Botton View

Pump Side View

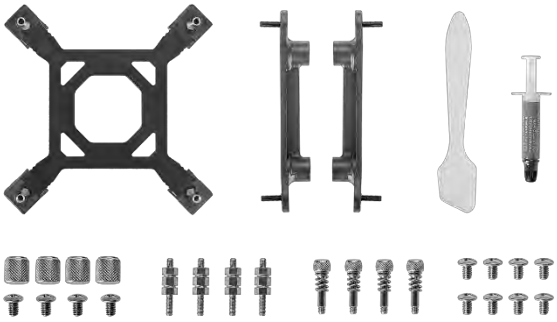

Parts

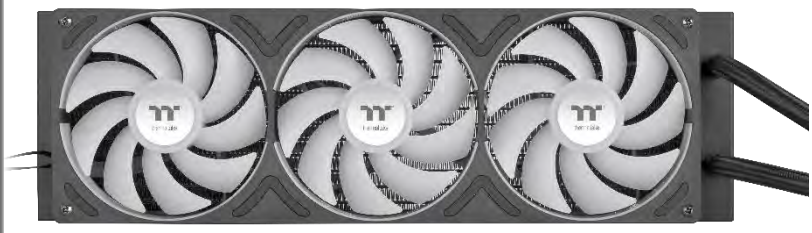

Fan & Radiator Top View

Fan & Radiator Back View

Fan & Radiator Side View

• Appearance

TH360 V3 ARGB Sync Snow Edition

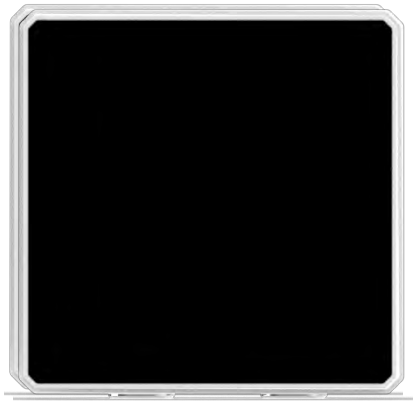

Pump Top View

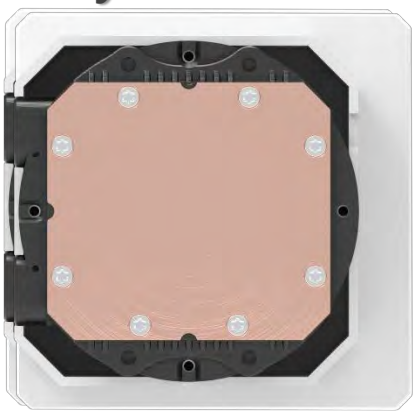

Pump Botton View

Pump Side View

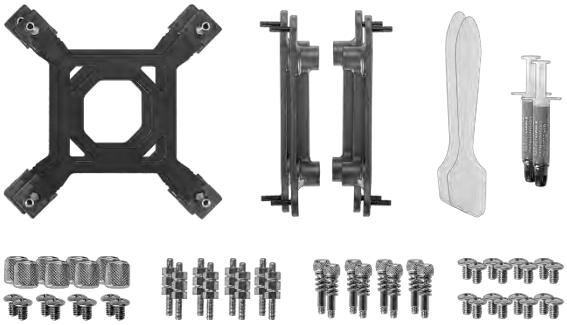

Parts

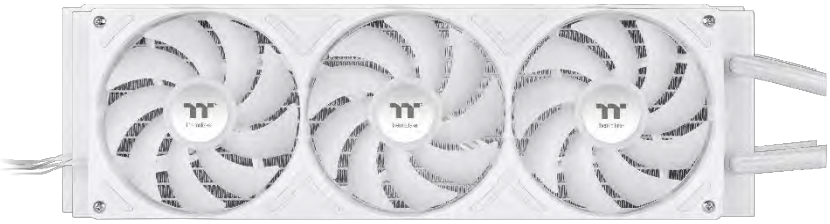

Fan & Radiator Top View

Fan & Radiator Back View

Fan & Radiator Side View

• Appearance

Infinity Mirror Design

Supports motherboard sync software control

Rotatable pump head

Supports motherboard sync software control

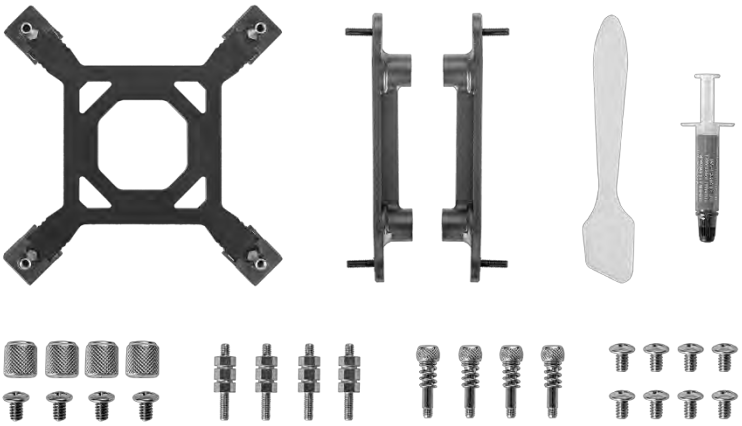

Universal Socket Compatible

Support
INTEL LGA1954

TH240/360 V3 ARGB Series

Single-Frame Fan

New illuminated design and lighting effects

High performance PWM fan

Pre-installed fan with improved cable management

Application

P/N: CL-W465-PL12SW-A、CL-W466-PL12SW-A
CL-W467-PL12SW-A、CL-W468-PL12SW-A

TH240 & 360 V3

ARGB Sync

Release the full CPU Horsepower

thermaltake

*Requires motherboard sync for ARGB lighting effect