DAP145

DAP145 Industrial Wireless Access Point with RS485

Industrial & automation

Energy & utilities

Smart city

WI-FI AND RS485 BRIDGING

Bridge RS-485 devices to IP with Serial-over-IP and Modbus

FLEXIBLE WI-FI MODES

Mesh, STA, and Fast Roaming for coverage extension, backhaul, and industrial asset mobility

CLOUD-READY DATA COLLECTION

Collect and convert industrial data with Data to Server tool and native protocol support

DESIGNED FOR INDUSTRY

Narrow footprint with integrated DIN rail mounting and top-entry terminal block power

Copyright © 2025, UAB TELTONIKA NETWORKS.
Specifications and information given in this document are subject to change by UAB TELTONIKA NETWORKS without prior notice.

Wireless	
Wireless mode	IEEE 802.11b/g/n, (Wi-Fi 4) Access Point (AP), Station (STA)
Wi-Fi security	WPA3 EAP, WPA3 SAE, WPA2 Enterprise-PEAP, WPA2 PSK; AES CCMP, TKIP, Auto Cipher modes, client separation
SSID/ESSID	SSID stealth mode and access control based on MAC address
Wi-Fi users	Up to 50 simultaneous connections
Wireless Connectivity Features	Wireless mesh (802.11s), fast roaming (802.11r), Relayd, BSS transition management (802.11v), radio resource measurement (802.11k)
Wireless MAC filter	Allowlist, blocklist
Wireless QR code generator	Once scanned, a user will automatically enter your network without needing to input login information
TravelMate	Forward Wi-Fi hotspot landing page to a subsequent connected device

Ethernet	
LAN	2 x LAN ports, 10/100 Mbps, compliance with IEEE 802.3, IEEE 802.3u, 802.3az standards, supports auto MDI/MDIX crossover

Copyright © 2025, UAB TELTONIKA NETWORKS.
Specifications and information given in this document are subject to change by UAB TELTONIKA NETWORKS without prior notice.

Network

Routing	Static routing, Dynamic routing BGP, OSPF v2, RIP v1/v2, EIGRP, NHRP , Policy based routing
Network protocols	TCP, UDP, IPv4, IPv6, ICMP, NTP, DNS, HTTP, HTTPS, SFTP, FTP, SMTP, SSL/TLS, ARP, VRRP, PPP, PPPoE, UPNP, SSH, DHCP, Telnet, SMPP, SNMP, MQTT, Wake On Lan (WOL)
VoIP passthrough support	H.323 and SIP-alg protocol NAT helpers, allowing proper routing of VoIP packets
Connection monitoring	Ping Reboot, Wget Reboot, Periodic Reboot, LCP and ICMP for link inspection
Firewall	Port forward, traffic rules, custom rules, TTL target customisation
Firewall status page	View all your Firewall statistics, rules, and rule counters
Port management	View device ports, enable and disable each of them, turn auto-configuration on or off change their transmission speed, and so on
Network topology	Visual representation of your network, showing which devices are connected to which other devices
DHCP	Static and dynamic IP allocation, DHCP relay, DHCP server configuration, status, static leases: MAC with wildcards
QoS / Smart Queue Management (SQM)	Traffic priority queuing by source/destination, service, protocol or port, WMM, 802.11e
DDNS	Supported >77 service providers, others can be configured manually
DNS over HTTPS	DNS over HTTPS proxy enables secure DNS resolution by routing DNS queries over HTTPS
Network backup	Wi-Fi WAN, VRRP, Wired options, each of which can be used as an automatic Failover
Load balancing	Balance Internet traffic over multiple WAN connections
Hotspot	Captive portal (hotspot), internal/external Radius server, Radius MAC authentication, SMS authorisation, SSO authentication, internal/external landing page, walled garden, user scripts, URL parameters, user groups, individual user or group limitations, user management, 9 default customisable themes and optionality to upload and download customised hotspot themes
SSHFS	Possibility to mount remote file system via SSH protocol
Traffic Management	Real-time monitoring, wireless signal charts, traffic usage history
IGMP Proxy	Possibility to relay multicast membership messages between hosts and a router, enabling multicast traffic to flow across different network segments

Copyright © 2025, UAB TELTONIKA NETWORKS.
Specifications and information given in this document are subject to change by UAB TELTONIKA NETWORKS without prior notice.

Security	
Authentication	Pre-shared key, digital certificates, X.509 certificates, TACACS , Internal & External RADIUS users authentication, IP & login attempts block, time-based login blocking, built-in random password generator
Firewall	Preconfigured firewall rules can be enabled via WebUI, unlimited firewall configuration via CLI, DMZ, NAT, NAT-T, NAT64
Attack prevention	DDOS prevention (SYN flood protection, SSH attack prevention, HTTP/HTTPS attack prevention), port scan prevention (SYN-FIN, SYN-RST, X-mas, NULL flags, FIN scan attacks)
VLAN	Port and tag-based VLAN separation
WEB filter	Blacklist for blocking out unwanted websites, Whitelist for specifying allowed sites only
Access control	Flexible access control of SSH, Web interface, CLI and Telnet
Certificate Manager	Certificate creation tool allows to create CA, server, client, let's encrypt, SCEP certificates
802.1x	Port-based network access control client

VPN	
OpenVPN	Multiple clients and a server can run simultaneously, 27 encryption methods
OpenVPN Encryption	DES-CBC 64, RC2-CBC 128, DES-EDE-CBC 128, DES-EDE3-CBC 192, DESX-CBC 192, BF-CBC 128, RC2-40-CBC 40, CAST5-CBC 128, RC2-64-CBC 64, AES-128-CBC 128, AES-128-CFB 128, AES-128-CFB1 128, AES-128-CFB8 128, AES-128-OFB 128, AES-128-GCM 128, AES-192-CFB 192, AES-192-CFB1 192, AES-192-CFB8 192, AES-192-OFB 192, AES-192-CBC 192, AES-192-GCM 192, AES-256-GCM 256, AES-256-CFB 256, AES-256-CFB1 256, AES- 256-CFB8 256, AES-256-OFB 256, AES-256-CBC 256
IPsec	XFRM, IKEv1, IKEv2, with 14 encryption methods for IPsec (3DES, DES, AES128, AES192, AES256, AES128GCM8, AES192GCM8, AES256GCM8, AES128GCM12, AES192GCM12, AES256GCM12, AES128GCM16, AES192GCM16, AES256GCM16)
GRE	GRE tunnel, GRE tunnel over IPsec support
PPTP, L2TP	Client/Server instances can run simultaneously, L2TPv3, L2TP over IPsec support
Stunnel	Proxy designed to add TLS encryption functionality to existing clients and servers without any changes in the program's code
DMVPN	Method of building scalable IPsec VPNs, Phase 2 and Phase 3 and Dual Hub support
SSTP	SSTP client instance support
ZeroTier	ZeroTier VPN client support
WireGuard	WireGuard VPN client and server support
Tinc	Tinc offers encryption, authentication and compression in it's tunnels. Client and server support.
EoIP	Ethernet over IP (EoIP) Tunneling is a MikroTik RouterOS protocol based on GRE RFC 1701 that creates an Ethernet tunnel between two routers on top of an IP connection

Copyright © 2025, UAB TELTONIKA NETWORKS.
Specifications and information given in this document are subject to change by UAB TELTONIKA NETWORKS without prior notice.

BacNET

Supported modes	Router
Supported connection types	RTU(RS485)
Configuration options	Support for multiple BACnet/IP interfaces, Network number assignment, Preconfigured BDT entries for BBMD (BACnet Broadcast Management Device)

OPC UA

Supported modes	Client, Server
Supported connection types	TCP

MODBUS

Supported modes	Server, Client
Supported connection types	TCP, RTU(RS485)
Custom registers	MODBUS TCP custom register block requests, which read/write to a file inside the router, and can be used to extend MODBUS TCP Client functionality
Supported data formats	8-bit: INT, UINT; 16-bit: INT, UINT (MSB or LSB first); 32-bit: float, INT, UINT (ABCD (big-endian), DCBA (little-endian), CDAB, BADC), HEX, ASCII

Data to Server

Protocol	HTTP(S), MQTT, Azure MQTT
Data to server	Extract parameters from multiple sources and different protocols, and send them all to a single server; Custom LUA scripting, allowing scripts to utilize the router's Data to server feature

MQTT Gateway

Modbus MQTT Gateway	Allows sending commands and receiving data from MODBUS Server through MQTT broker

DNP3

Supported modes	Station, Outstation
Supported connection	TCP, RTU(RS485)

Copyright © 2025, UAB TELTONIKA NETWORKS.
Specifications and information given in this document are subject to change by UAB TELTONIKA NETWORKS without prior notice.

DLMS/COSEM	
DLMS Support	DLMS - standard protocol for utility meter data exchange
Supported modes	Client
Supported connection types	TCP, RTU(RS485)

API	
Teltonika Networks Web API (beta) support	Expand your device's possibilities by using a set of configurable API endpoints to retrieve or change data. For more information, please refer to this documentation: https://developers.teltonika-networks.com

Monitoring & Management	
WEB UI	HTTP/HTTPS, status, configuration, FW update, CLI, troubleshoot, multiple event log servers, firmware update availability notifications, event log, system log, kernel log, Internet status
FOTA	Firmware update from server, automatic notification
SSH	SSH (v1, v2)
Email	Receive email message status alerts of various services
TR-069	OpenACS, EasyCwmp, ACSLite, tGem, LibreACS, GenieACS, FreeACS, LibCWMP, Friendly tech, AVSystem
MQTT	MQTT Broker, MQTT publisher
SNMP	SNMP (v1, v2, v3), SNMP Trap, Brute force protection
JSON-RPC	Management API over HTTP/HTTPS
RMS	Teltonika Remote Management System (RMS)

IoT Platforms	
ThingWorx	Allows monitoring of: Device name, HW version, Serial number, FW version, WAN IP. Allows actions from the cloud: FW update, Reboot
Cumulocity - Cloud of Things	Allows monitoring of: Device name, HW version, Serial number, FW version, WAN IP. Allows actions from the cloud: FW update, Reboot
Azure IoT Hub	Can be configured with Data to Server to send all the available parameters to the cloud. Has Direct method support which allows to execute RutOS API calls on the IoT Hub. Also has Plug and Play integration with Device Provisioning Service that allows zero-touch device provisioning to IoT Hubs
AWS IoT Core	Utility to interact with the AWS cloud platform. Jobs Support: Call the device's API using AWS Jobs functionality

Copyright © 2025, UAB TELTONIKA NETWORKS.
Specifications and information given in this document are subject to change by UAB TELTONIKA NETWORKS without prior notice.

System Characteristics	
CPU	Mediatek, 580 MHz, MIPS 24KEc
RAM	128 MB, DDR2
FLASH storage	16 MB serial NOR flash

Firmware/Configuration	
WEB UI	Update FW from file, check FW on server, configuration profiles, configuration backup
FOTA	Update FW
RMS	Update FW/configuration for multiple devices at once
Keep settings	Update FW without losing current configuration
Factory settings reset	A full factory reset restores all system settings, including the IP address, PIN, and user data to the default manufacturer's configuration

FIRMWARE CUSTOMISATION	
Operating system	RutOS (OpenWrt based Linux OS)
Supported languages	Busybox shell, Lua, C, C++
Development tools	SDK package with build environment provided
GPL customization	You can create your own custom, branded firmware and web page application by changing colours, logos, and other elements in our firmware to fit your or your clients' needs
Package Manager	The Package Manager is a service used to install additional software on the device

Serial	
RS485	Terminal block connector: D+, D-, R+, R- (2 or 4 wire interface)
Serial functions	Console, Serial over IP, Modem, MODBUS gateway

Power	
Connector	3-pos plugable terminal block
Input voltage range	9-30 VDC, reverse polarity protection, surge protection >31 VDC 10us max
PoE (passive)	Passive PoE over spare pairs. Possibility to power up through LAN1 port, not compatible with IEEE802.3af, 802.3at and 802.3bt standards, Mode B, 9 - 30 VDC
Power consumption	Idle: < 1 W / Max: < 2 W

Copyright © 2025, UAB TELTONIKA NETWORKS.
Specifications and information given in this document are subject to change by UAB TELTONIKA NETWORKS without prior notice.

Physical Interfaces	
Ethernet	2 x RJ45 ports, 10/100 Mbps
Status LEDs	2 x LAN type LED, 1 x Power LED
Power	1 x 3-pin power connector
Antennas	1 x RP-SMA for Wi-Fi
RS485	1 x 6-pin terminal block for 2-wire or 4-wire interface
Reset	Reboot/User default reset/Factory reset button
Other	1 x Grounding screw

Physical Specification	
Casing material	Anodized aluminium housing and panels
Dimensions (W x H x D)	113.10 x 25 x 68.6 mm
Weight	149.2 g
Mounting options	Integrated DIN rail bracket; wall mount and flat surface (additional kit needed)

Operating Environment	
Operating temperature	-40 °C to 75 °C
Operating humidity	10% to 90% non-condensing
Ingress Protection Rating	IP30

Regulatory & Type Approvals	
Regulatory	CE/RED, UKCA, CB, RCM, FCC, IC, EAC, UCRF, WEEE

Copyright © 2025, UAB TELTONIKA NETWORKS.
Specifications and information given in this document are subject to change by UAB TELTONIKA NETWORKS without prior notice.

Hardware

FRONT VIEW

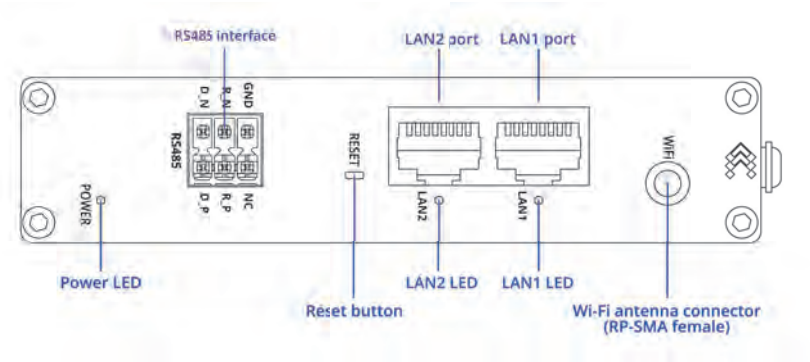

BACK VIEW

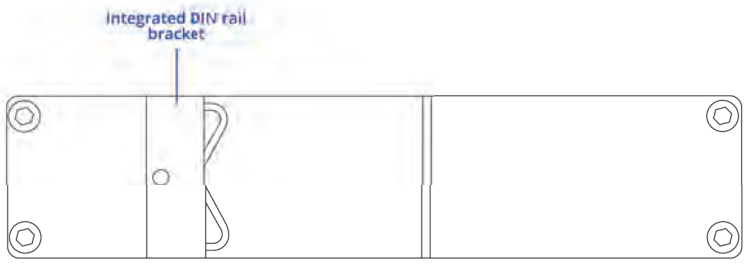

POWER CONNECTOR

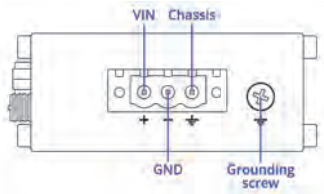

1 x 6 -PIN TERMINAL BLOCK

1. Driver negative signal (D_N)
2. Receiver negative signal (RN)
3. Device ground (GND)
4. Driver positive signal (D_P)
5. Receiver positive signal(R_P)
6. Power input 9-30 VDC (NC)

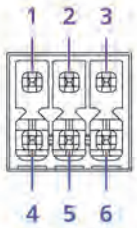

Copyright © 2025, UAB TELTONIKA NETWORKS.
Specifications and information given in this document are subject to change by UAB TELTONIKA NETWORKS without prior notice.

Ordering

Standard package*

DAP145

QUICK START GUIDE

3PIN POWER CONNECTOR

2X3PIN CONNECTOR

*Standard package contents may differ based on standard order codes.

For more information on all available packaging options – please contact us directly.

Copyright © 2025, UAB TELTONIKA NETWORKS.
Specifications and information given in this document are subject to change by UAB TELTONIKA NETWORKS without prior notice.

Classification codes

HS Code: 851762

HTS: 8517.62.00

Available versions

DAP145 ******	N/A	DAP145000000 / Standard package DAP145000200 / Mass packing code

DAP145 spatial measurements

Available versions

Device housing (W x H x D)*	113.10 x 25 x 68.6 mm
Box (W x H x D):	141 x 74,5 x 28.2 mm
	*Housing measurements are presented without antenna connectors and screws; for measurements of other device elements look to the sections below

Copyright © 2025, UAB TELTONIKA NETWORKS.
Specifications and information given in this document are subject to change by UAB TELTONIKA NETWORKS without prior notice.

TOP VIEW

The figure below depicts the measurements of device and its components as seen from the top:

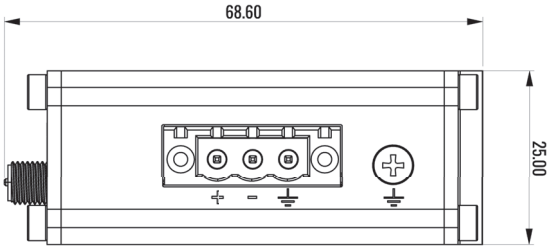

RIGHT VIEW

The figure below depicts the measurements of device and its components as seen from the right side:

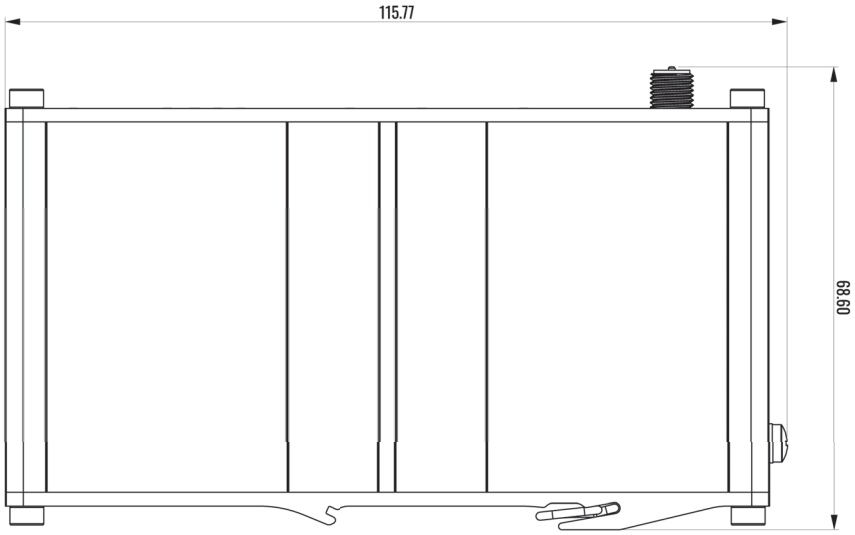

FRONT VIEW

The figure below depicts the measurements of device and its components as seen from the front panel side:

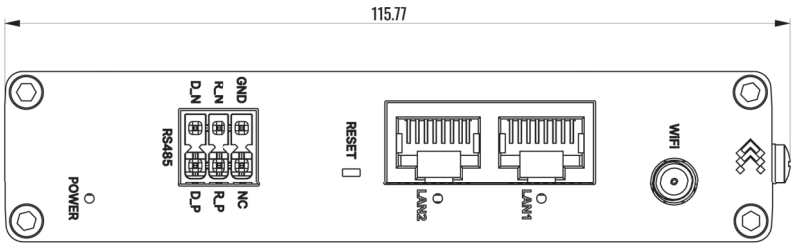

Copyright © 2025, UAB TELTONIKA NETWORKS.
Specifications and information given in this document are subject to change by UAB TELTONIKA NETWORKS without prior notice.

REAR VIEW

The figure below depicts the measurements of device and its components as seen from the top:

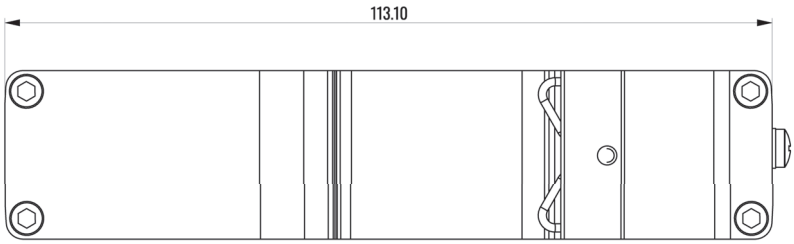

MOUNTING SPACE REQUIREMENTS

The figure below depicts an approximation of the device's dimensions when cables and antennas are attached:

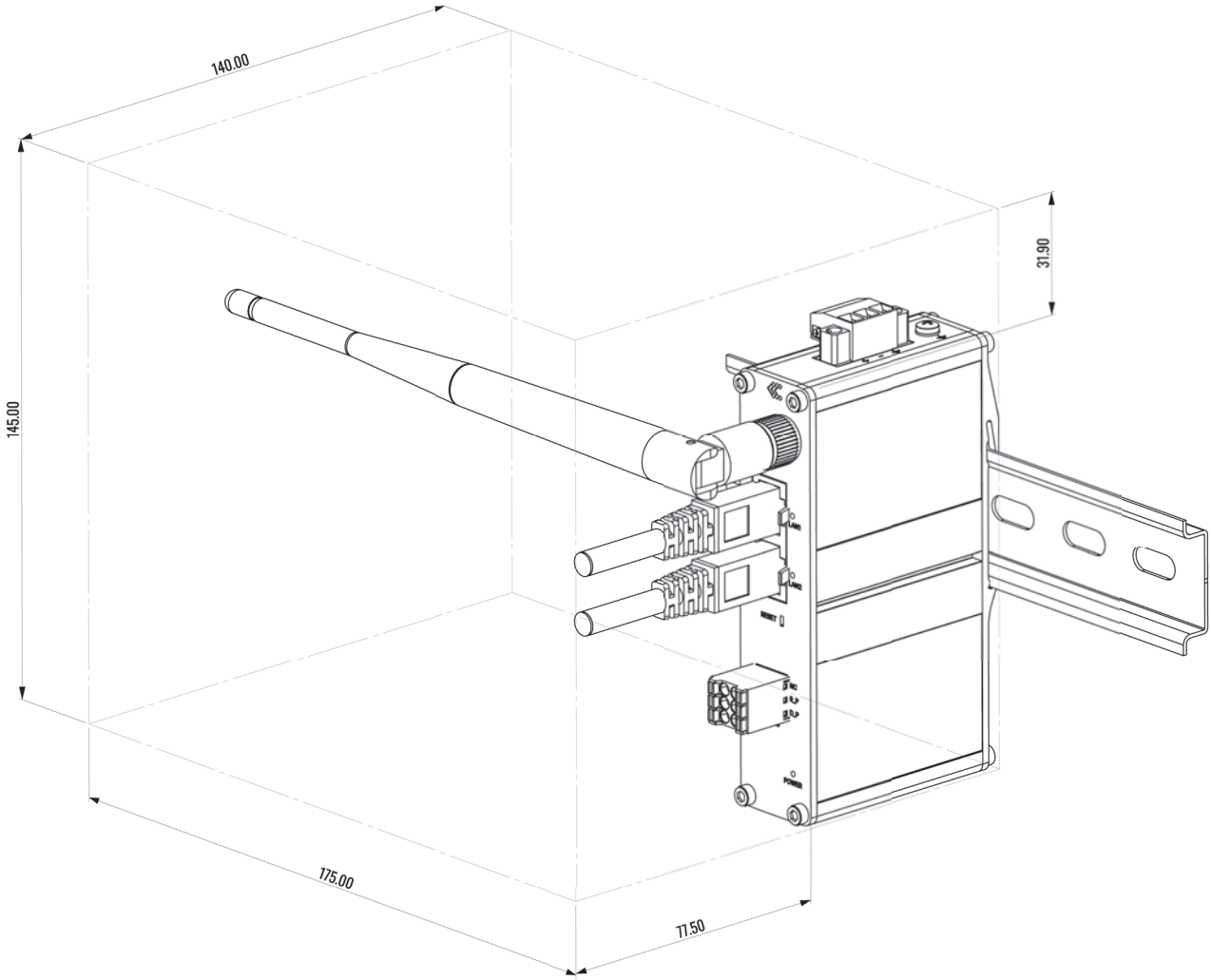

Copyright © 2025, UAB TELTONIKA NETWORKS.
Specifications and information given in this document are subject to change by UAB TELTONIKA NETWORKS without prior notice.