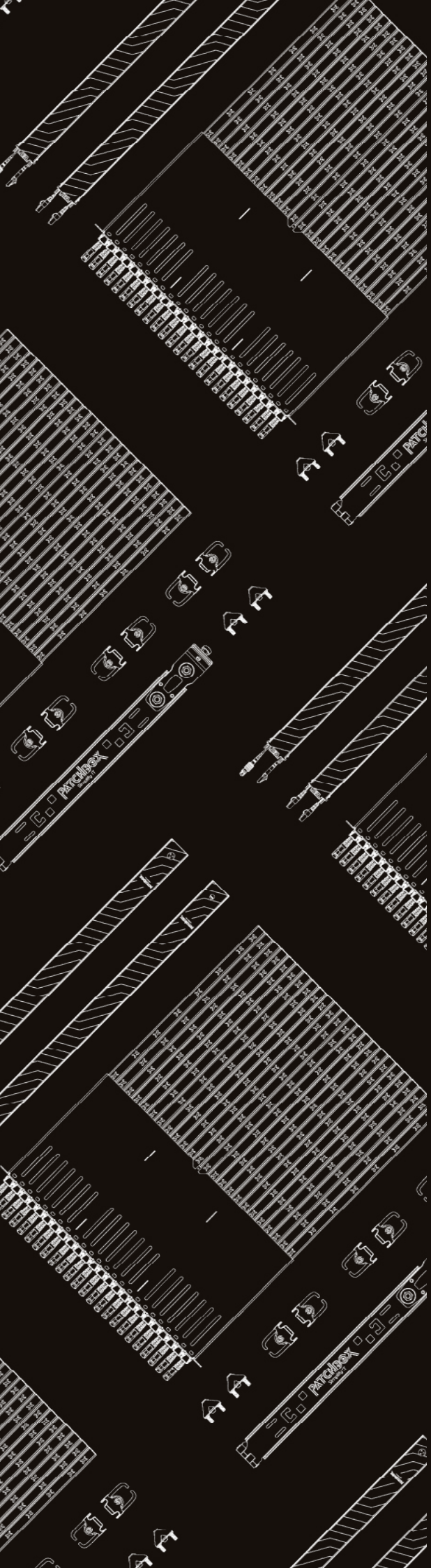

PATCHBOX

patchbox.one / Accessories

patchbox.one / Frame
patchbox.one / Patchcatch
patchbox.one / Blind Panels
patchbox.one / ID-Labels

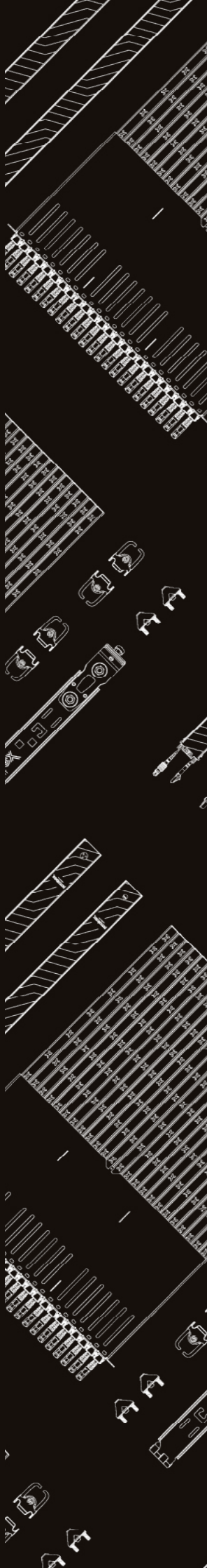

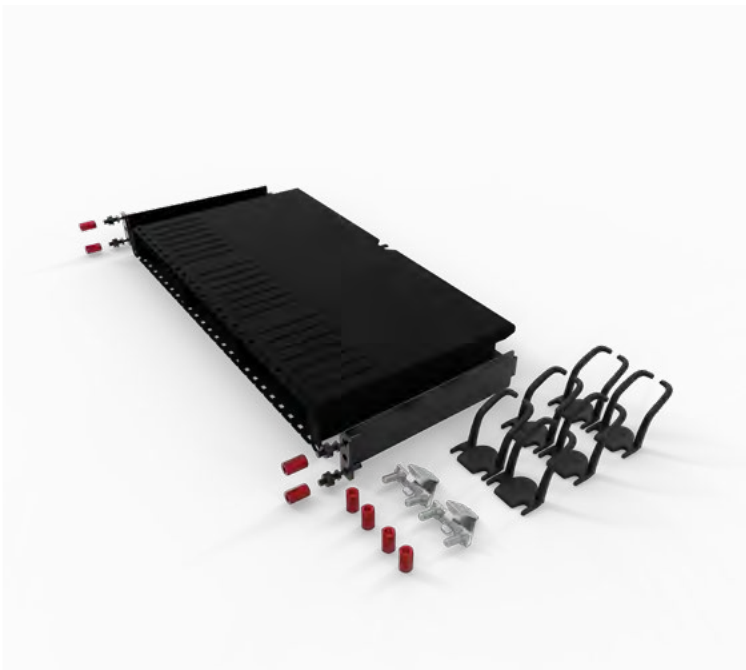

patchbox.one / Frame

To build your own patchbox.one, you first need a Frame. It offers space for 24 Cable Cassettes, which can be easily replaced within seconds. You can choose from a range of cable types, cable colors, and connector types. The Frame is easily and quickly mounted and can be filled with different Cable Cassettes or Blind Panels to cover any unoccupied slots, making it completely modular.

Items included

6 x Patchcatch

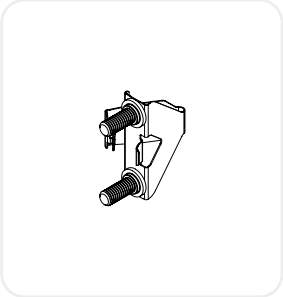

2 x /dev/mount incl. Hex Nuts

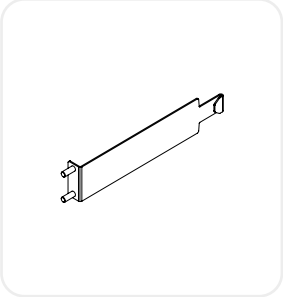

2 x Mounting Rails incl. Hex Nuts

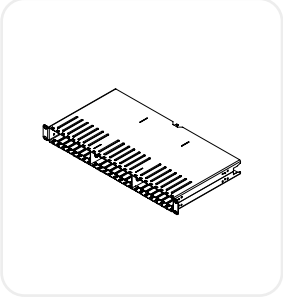

1 x Frame

Technical Information

Frame
RAL9005 powder coated steel

Plastic Parts
Polyoxymethylene POM

Gross Weight
2.65 kg / 5.84 lbs

Mounting Rails
Steel and RAL9005

Operating Temperature Range
-20°C – 60°C

Ambient Humidity Non-Condensing
10% – 90%

Packaging Dimensions
Width: 520 mm Height: 50 mm Depth: 250 mm | Width: 20.47 in Height: 1.96 in Depth: 9.84 in

Custom Tariff Number
85447000

Width: 481 mm / 18.93 in
Depth: 240 mm / 9.44 in
Height: 50 mm / 1.96 in

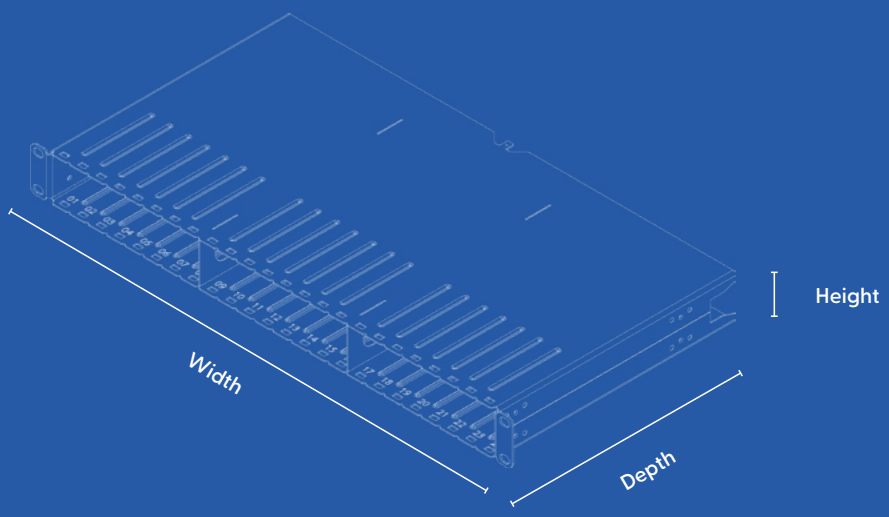

patchbox.one / Patchcatch

The Patchcatch is our 0RU cable organizer for your network rack. Stop wasting precious rack units with horizontal or vertical cable managers. Use the innovative Patchcatch for optimal cable management. Simply guide the cables to the side of the RU they are patched to, to keep the rack nice and tidy. Four pieces are included in one pack.

EU Made Product

Items included

4 x Patchcatch

Technical Information

Plastic Parts
Polyoxymethylene POM

Operating Temperature Range
-20°C – 60°C

Ambient Humidity Non-Condensing
10% – 90%

Gross Weight
0.06 kg / 0.13 lbs

Packaging Dimensions
Width: 100 mm Height: 40 mm Depth: 95 mm | Width: 3.93 in Height: 1.57 in Depth: 3.74 in

Custom Tariff Number
39269097

Width: 50 mm / 1.96 in
Depth: 58 mm / 2.28 in
Height: 51 mm / 2 in

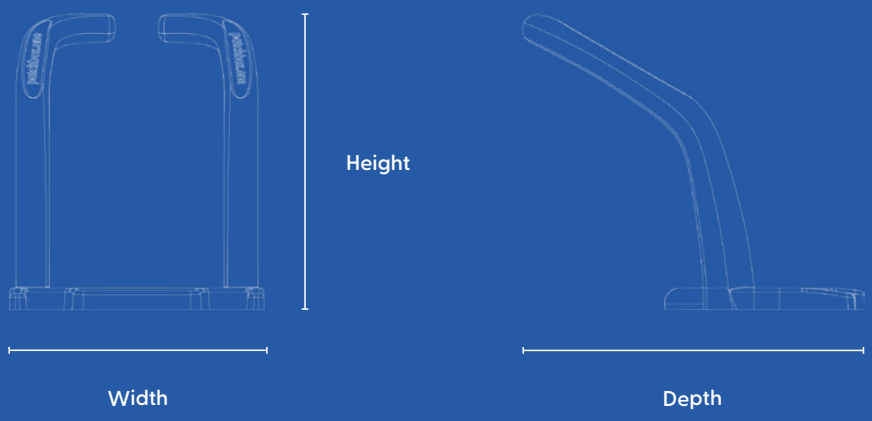

patchbox.one / Blind Panels

The Blind Panels can cover up unused slots from your patchbox.one. This ensures air circulation remains optimised and keeps the temperature in your network cabinet in balance. Simply clip them into the frame and reuse them anytime in another slot. Ten pieces are included in one pack.

EU Made Product

Items included

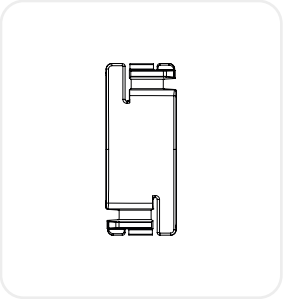

10 x Blind Panel

Technical Information

Plastic Parts
Polyoxymethylene POM

Operating Temperature Range
-20°C – 60°C

Ambient Humidity Non-Condensing
10% – 90%

Gross Weight
0.06 kg / 0.13 lbs

Packaging Dimensions
Width: 100 mm Height: 40 mm Depth: 95 mm | Width: 3.93 in Height: 1.57 in Depth: 3.74 in

Custom Tariff Number
39269097

Width: 17 mm / 0,66 in
Depth: 26 mm / 1.02 in
Height: 43 mm / 1.69 in

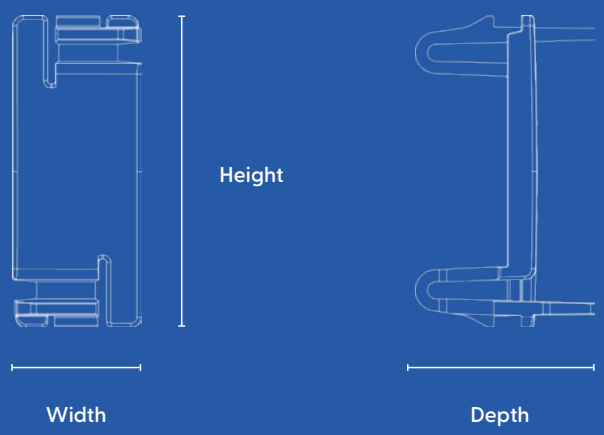

patchbox.one / ID-Labels

The patchbox.one / ID-Labels set contains 432 printable stickers on 3 A4 sheets, made for labelling up to 9 patchbox.one systems. The labels are applied directly to the cable stoppers and help improve cable management and documentation. Labels can be customized using our printable template, making it easy to identify and track connections.

Items included

3 x A4 Sheet

Technical Information

Scope of Delivery
3x A4 Label Sheet

Gross Weight
73 g / 0.16 lbs

Packaging Dimensions
Width: 260 mm Height: 350 mm | Width: 10.23 in Height: 13.77 in

Product Dimensions
Width: 210 mm Height: 297 mm | Width: 8.26 in Height: 11.69 in

Custom Tariff Number
48211010

Width: 13,82 mm / 0.54 in
Height: 9,81 mm / 0.38 in

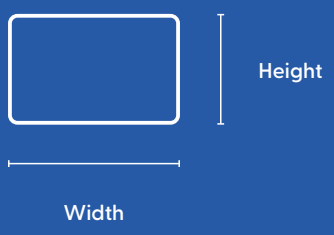

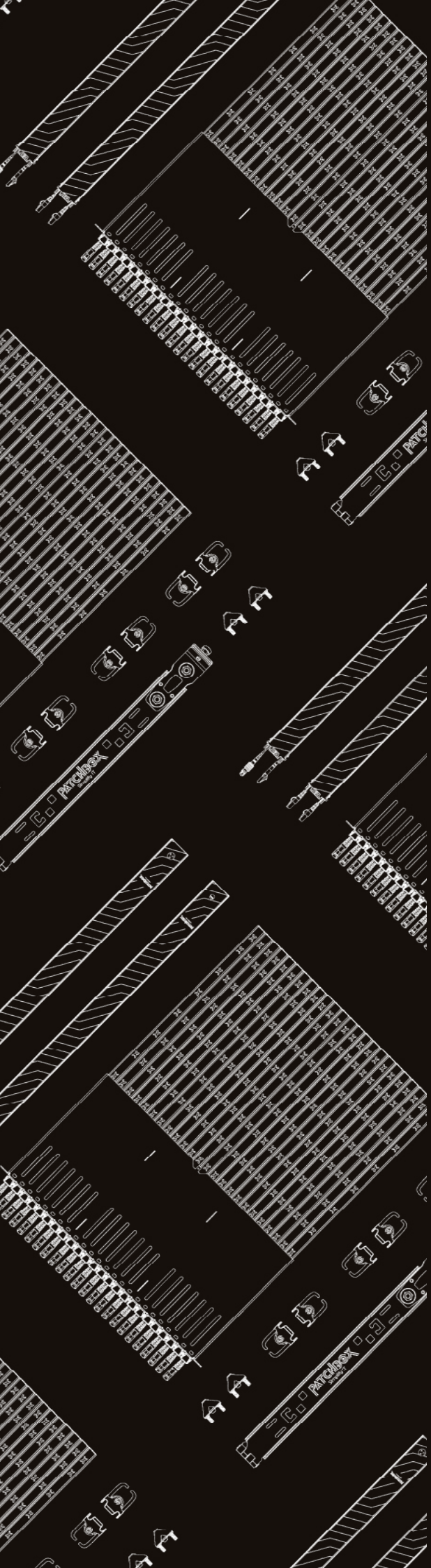

PATCHBOX

PATCHBOX GmbH
Handelskai 94-96 / 271
1200 Vienna / Austria

sales@patchbox.com
+43 199 71 960
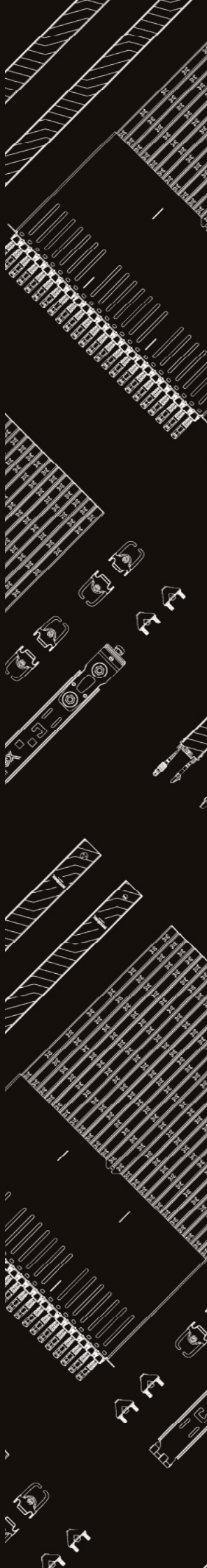
patchbox.com
shop.patchbox.com